OPMETING KOOI + ARCADE

DATUM		NAAM GEBOUW	
LIFTNUMMER		ADRES	
NAAM KLANT		ELVACENTER REFERENTIE	

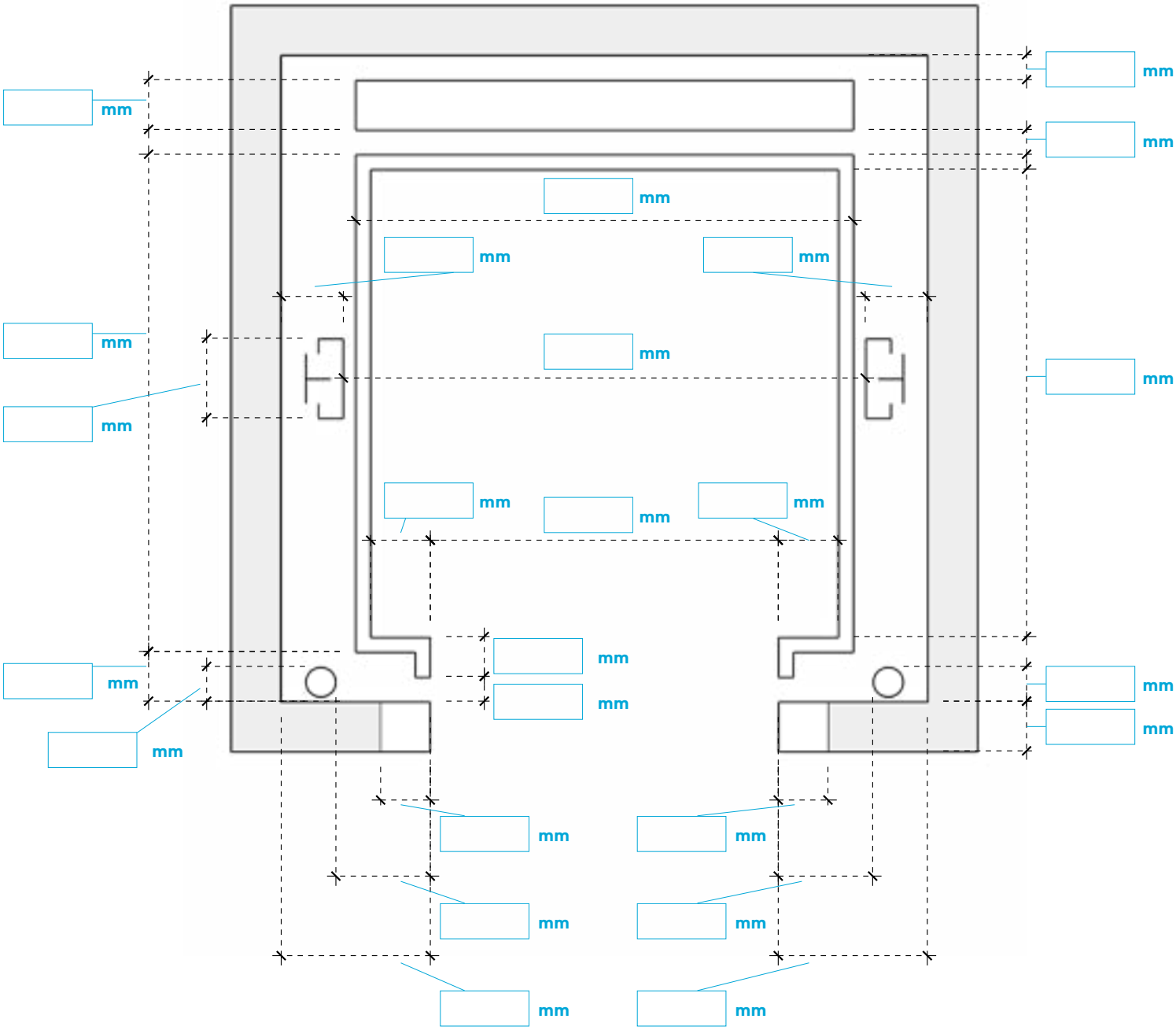

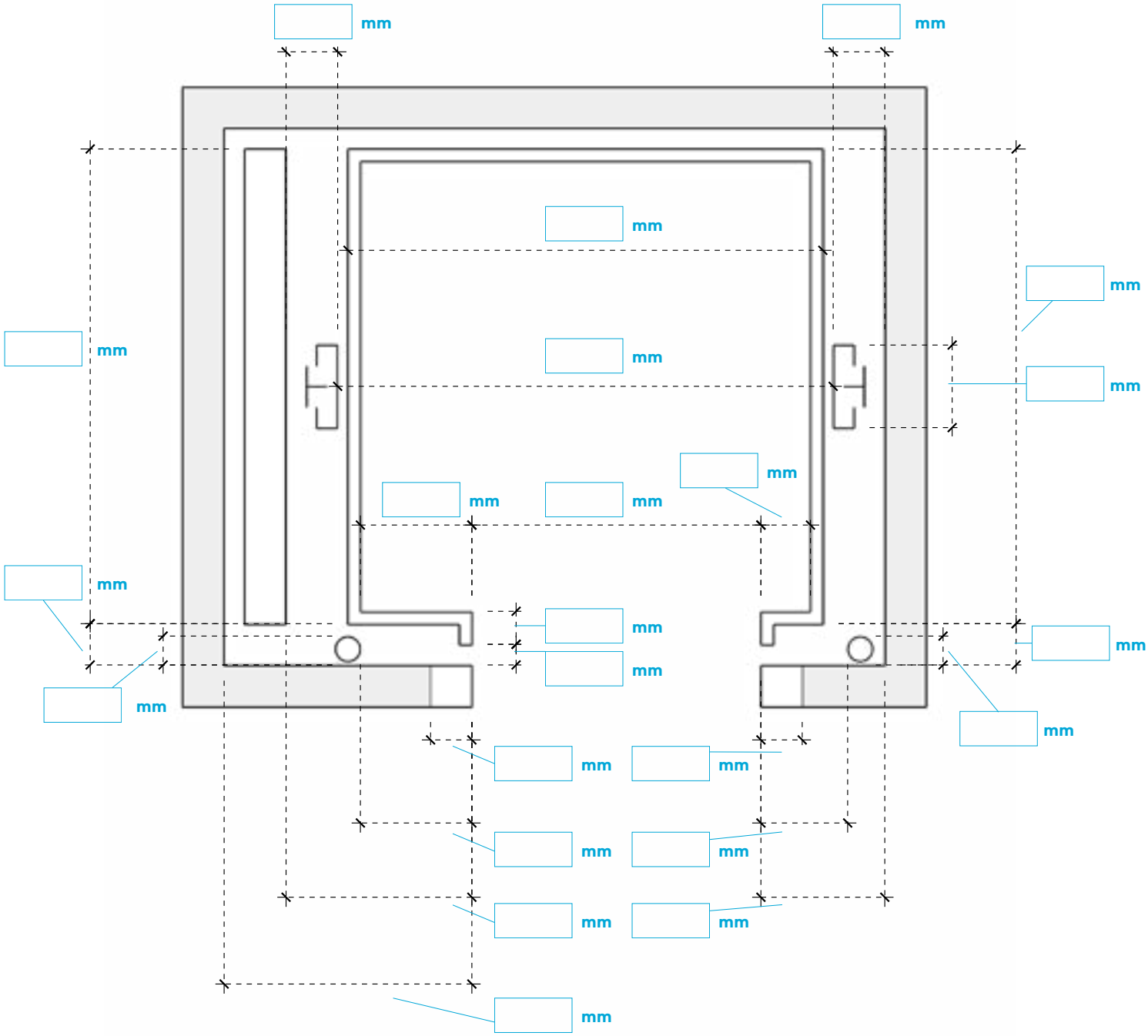
mm
mm
mm
mm
mm
mm
mm
mm
mm
mm
mm
mm
mm
mm
mm
mm
mm
mm
mm
mm
mm
mm
mm
mm
mm

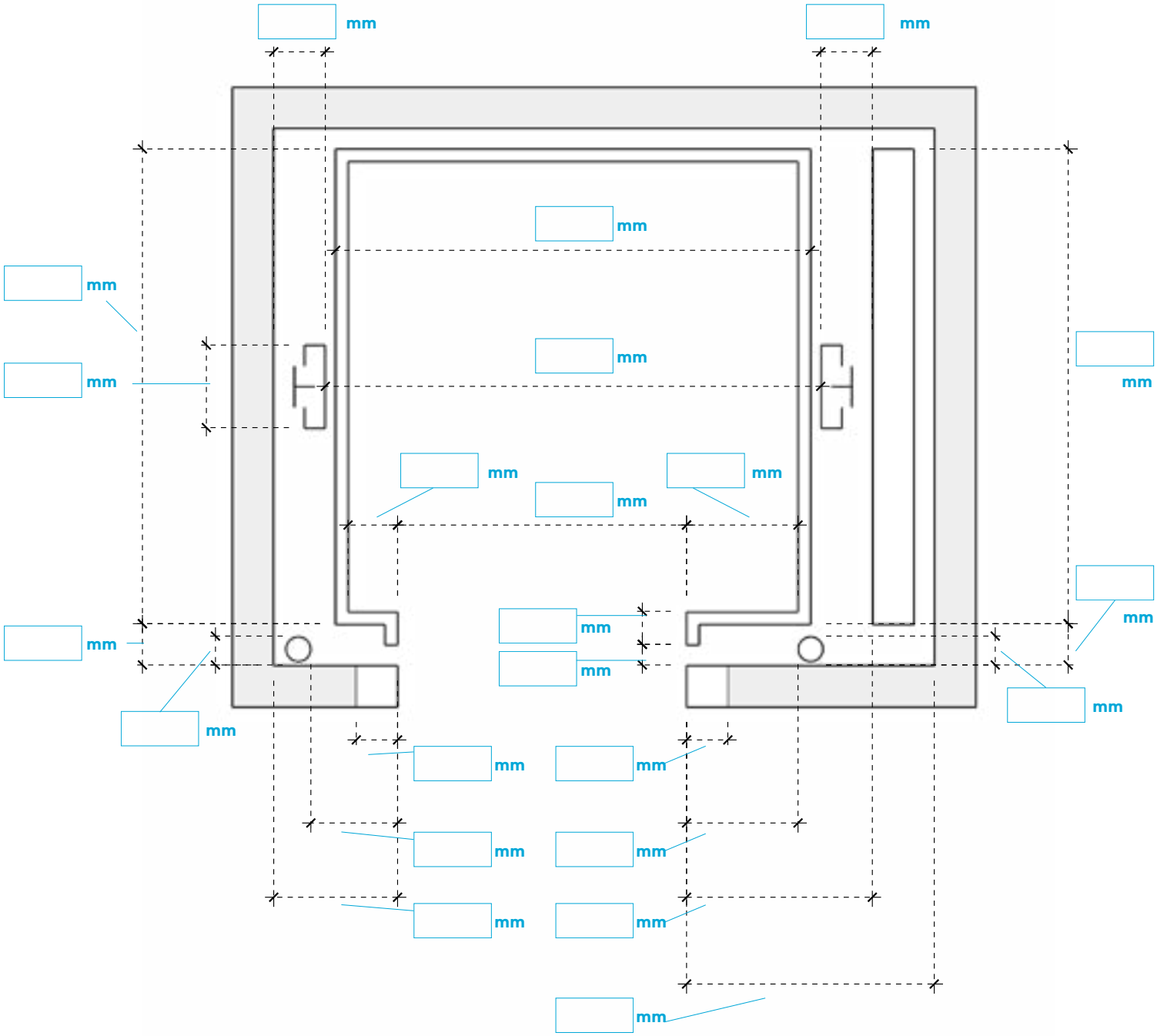
mm
mm
mm
mm
mm
mm
mm
mm
mm
mm
mm
mm
mm
mm
mm
mm
mm
mm
mm
mm
mm
mm
mm
mm

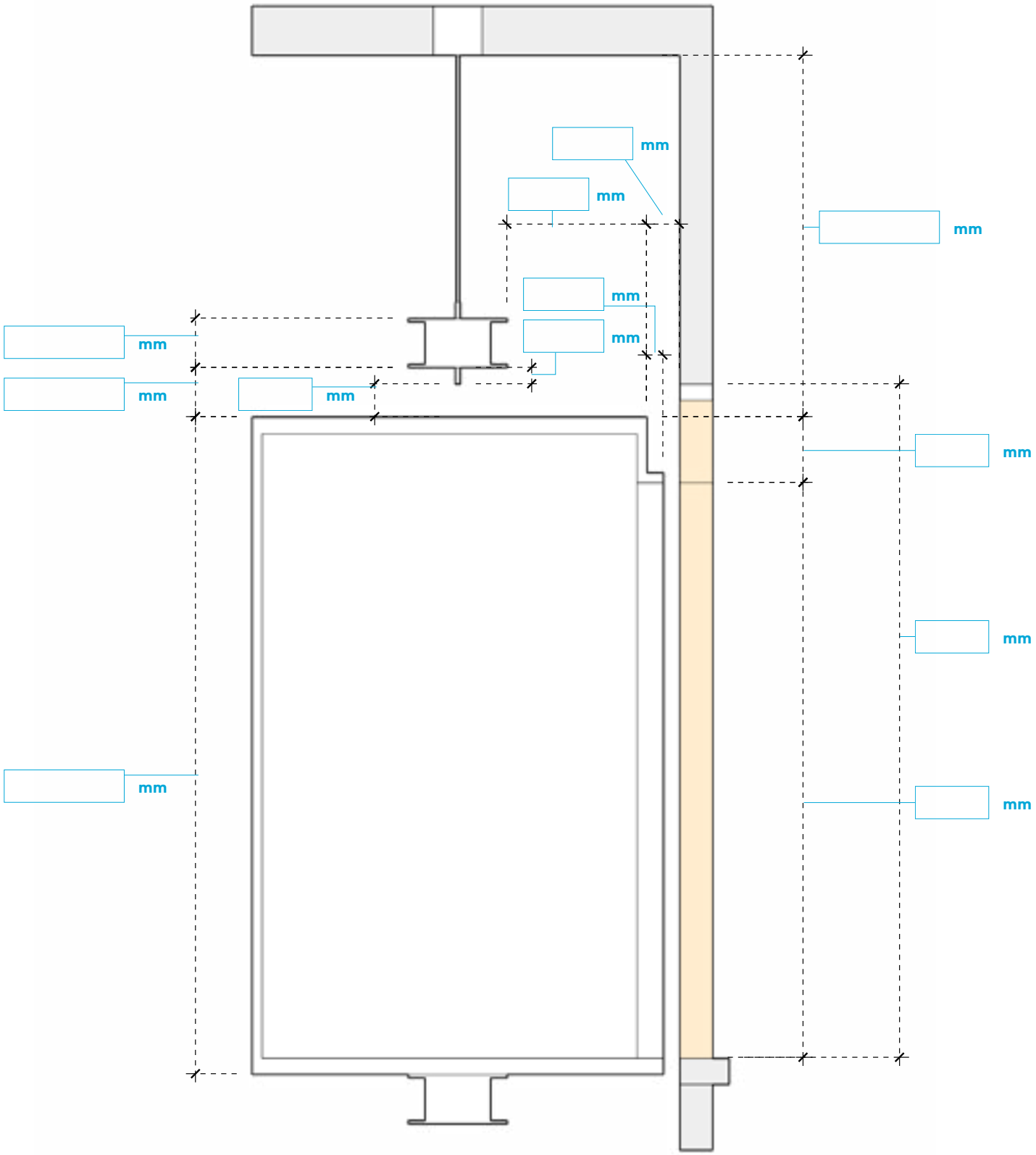
mm
mm
mm
mm
mm
mm
mm
mm
mm
mm
mm
mm